3 POLE MALE DEUTSCH DT CONNECTOR

PART NR.
DT04-3P

COUNTRY OF ORIGIN
China

STANDARDS
REACH and RoHS compliant
Flammability: UL94 V-0
Protection: IP68, IP6K9K

CHARACTERISTICS
- With grommet and wedge lock
- To be used with size 16 terminals, max 13A

PHOTO / TECHNICAL DRAWING

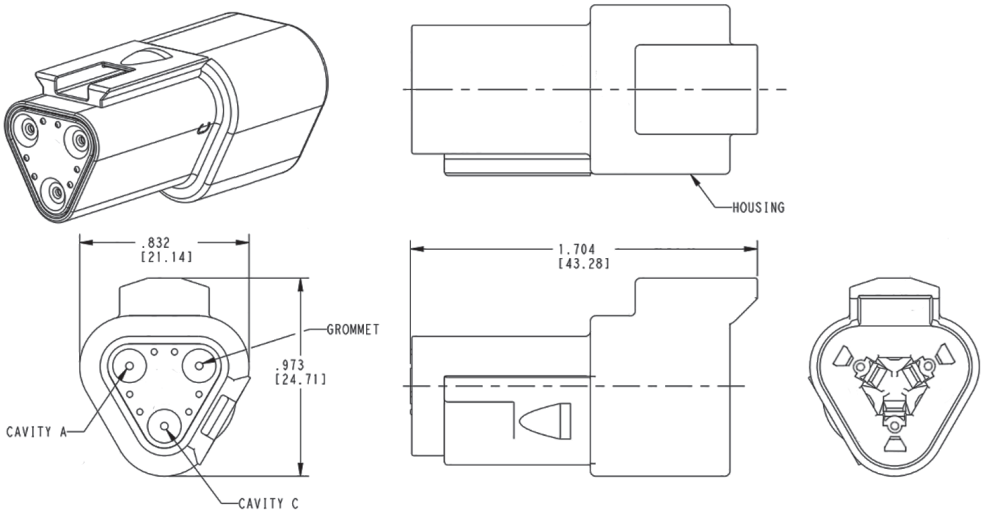

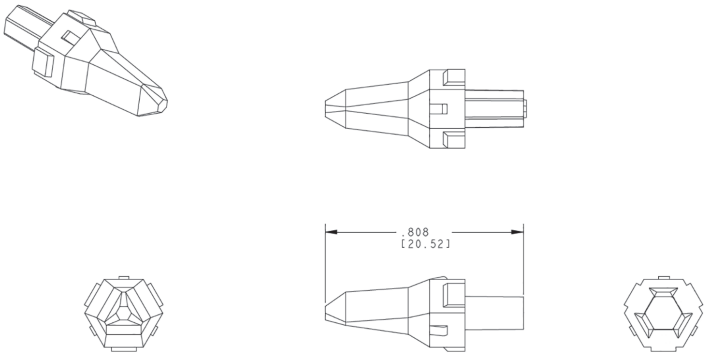

DIMENSIONS

L x W x H:	43,28 x 21,14 x 24,71 mm (housing)
L:	20,52 mm (wedge lock)

TECHNICAL SPECIFICATIONS

Housing:	PA66 GF15, grey
Grommet:	VMQ silicone, burnt red
Wedge lock:	PBT, green
Temperature range:	-55~125 °C
Max. current rating:	13A

www.ae-industries.nl