CIRCUIT BREAKER

PART NR.

STAS001	circuit breaker with key
KEY001	spare key

COUNTRY OF ORIGIN:
Taiwan

STANDARDS:
REACH and RoHS compliant
Protection: IP43

CHARACTERISTICS:

- **With protective rubber cover**
- **The key is removable in 50° position**

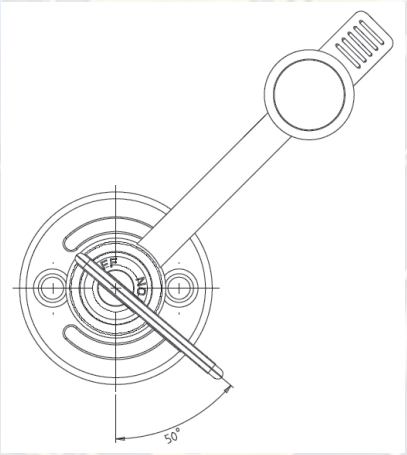

PHOTO / TECHNICAL DRAWING

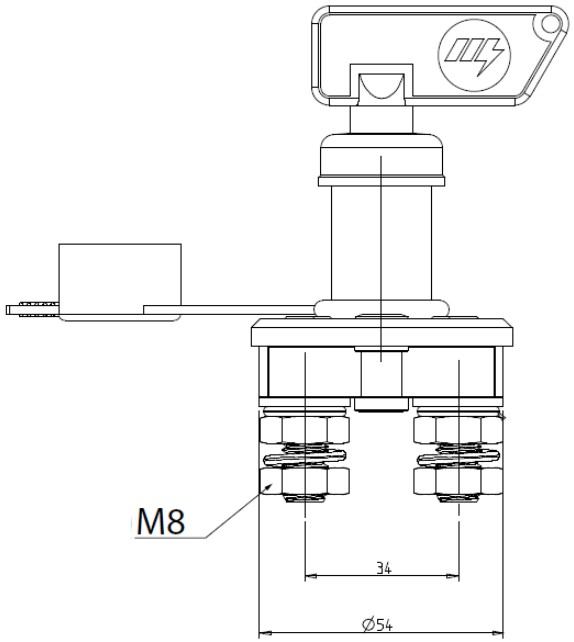

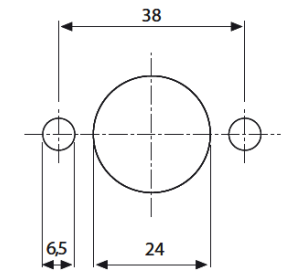

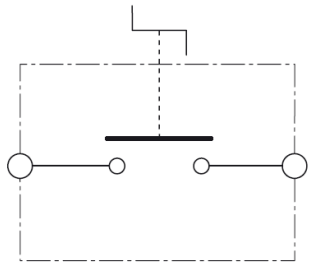

DIMENSIONS

Ø:	54 mm

TECHNICAL SPECIFICATIONS

Body:	Plastic
Contact termination:	M8 copper contacts with zinc plated steel nuts
Positions:	Off-On
Operating temperature:	-40 ~ 85°C
Panel aperture:	Ø 24 mm, screw holes 38 mm apart
Rating:	12-24V, 100A continuous, 500A intermit tent at 5 sec.